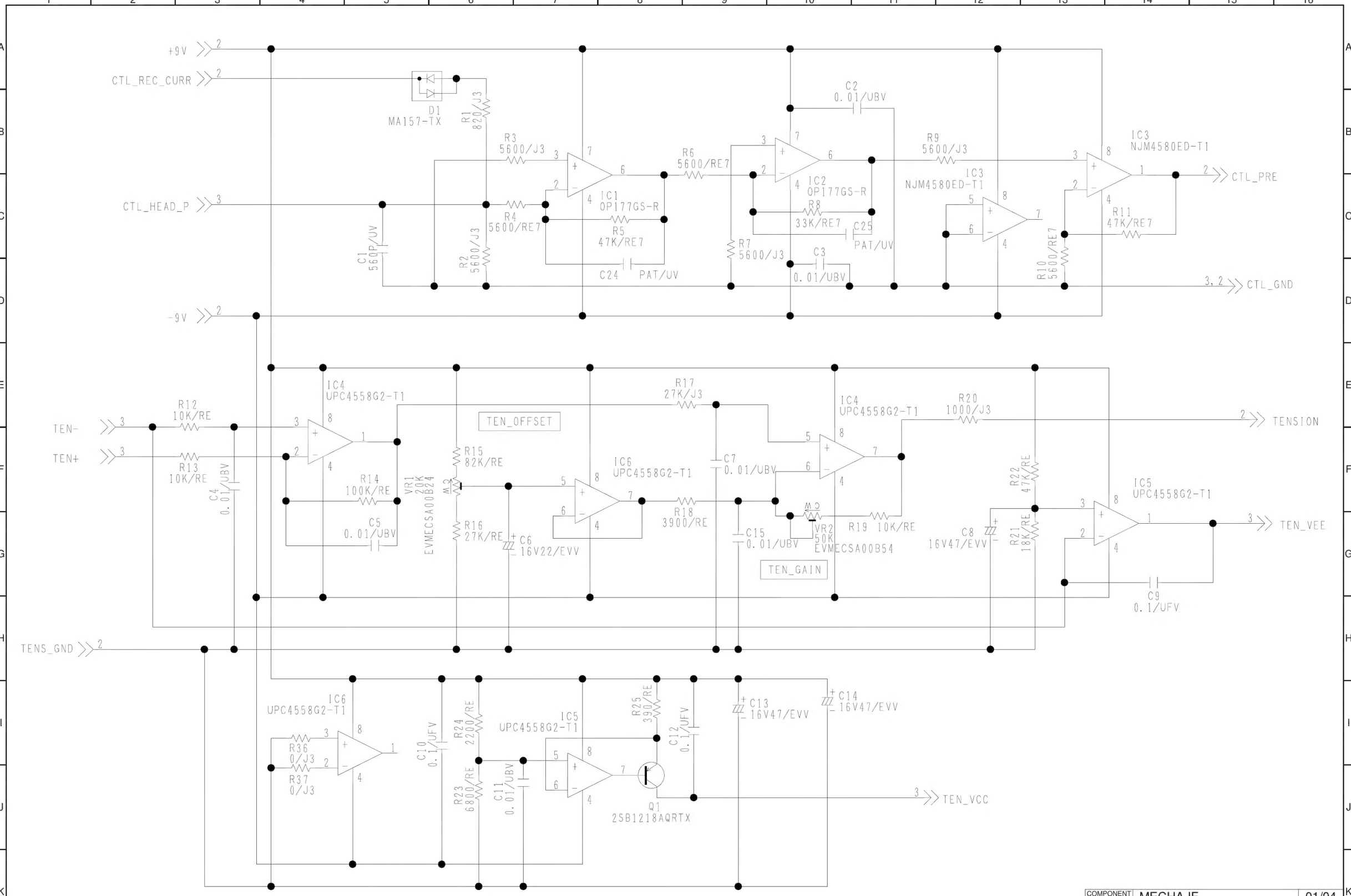

COMPONENT NAME	MECHA IF	01/04
CIRCUIT BOARD NO.	COMPONENT PATH	
VEP82216B		
KR2C31(1/4)		SCM174

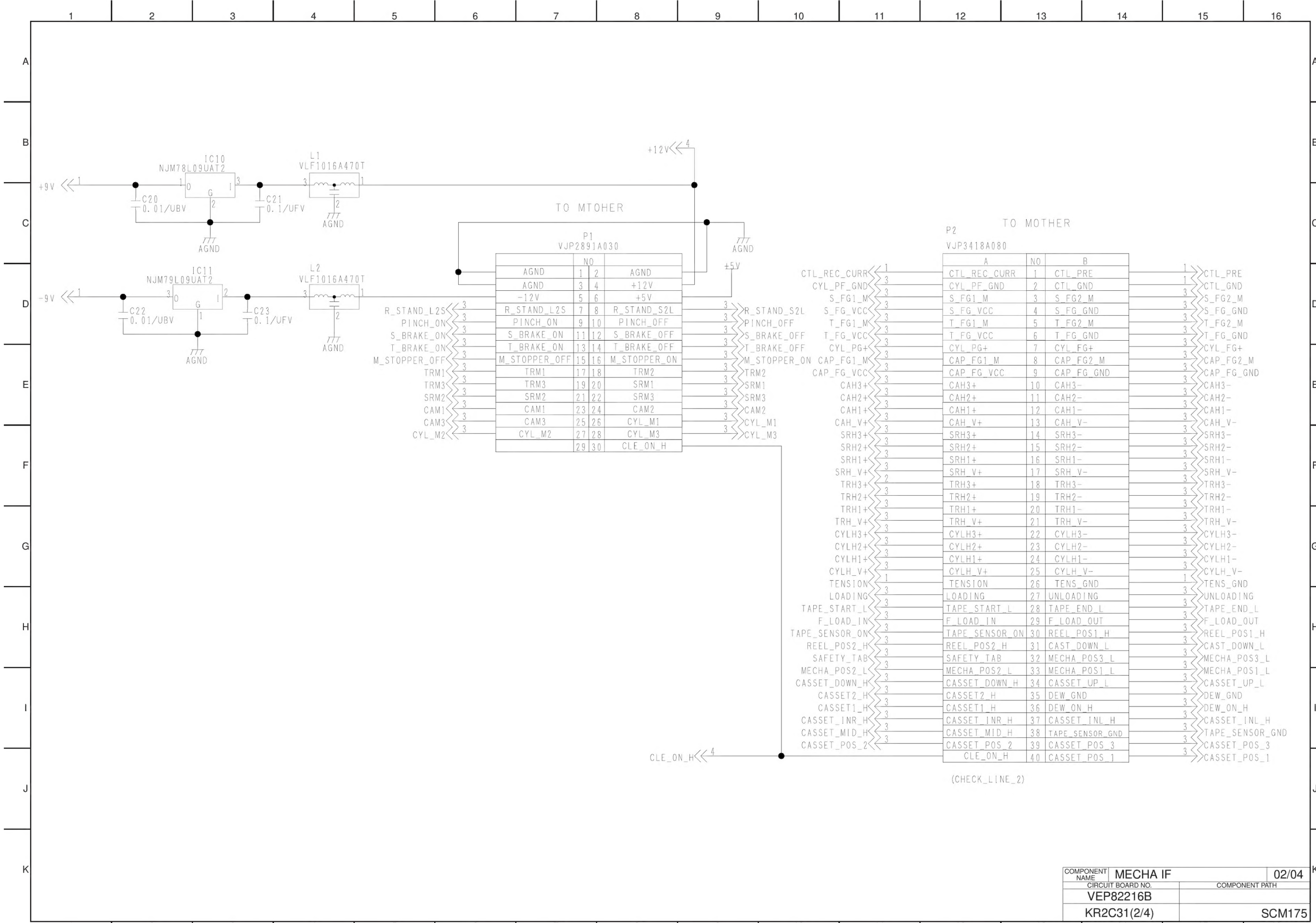

COMPONENT NAME	MECHA IF	02/04
CIRCUIT BOARD NO.		COMPONENT PATH
VEP82216B		
KR2C31(2/4)		SCM175

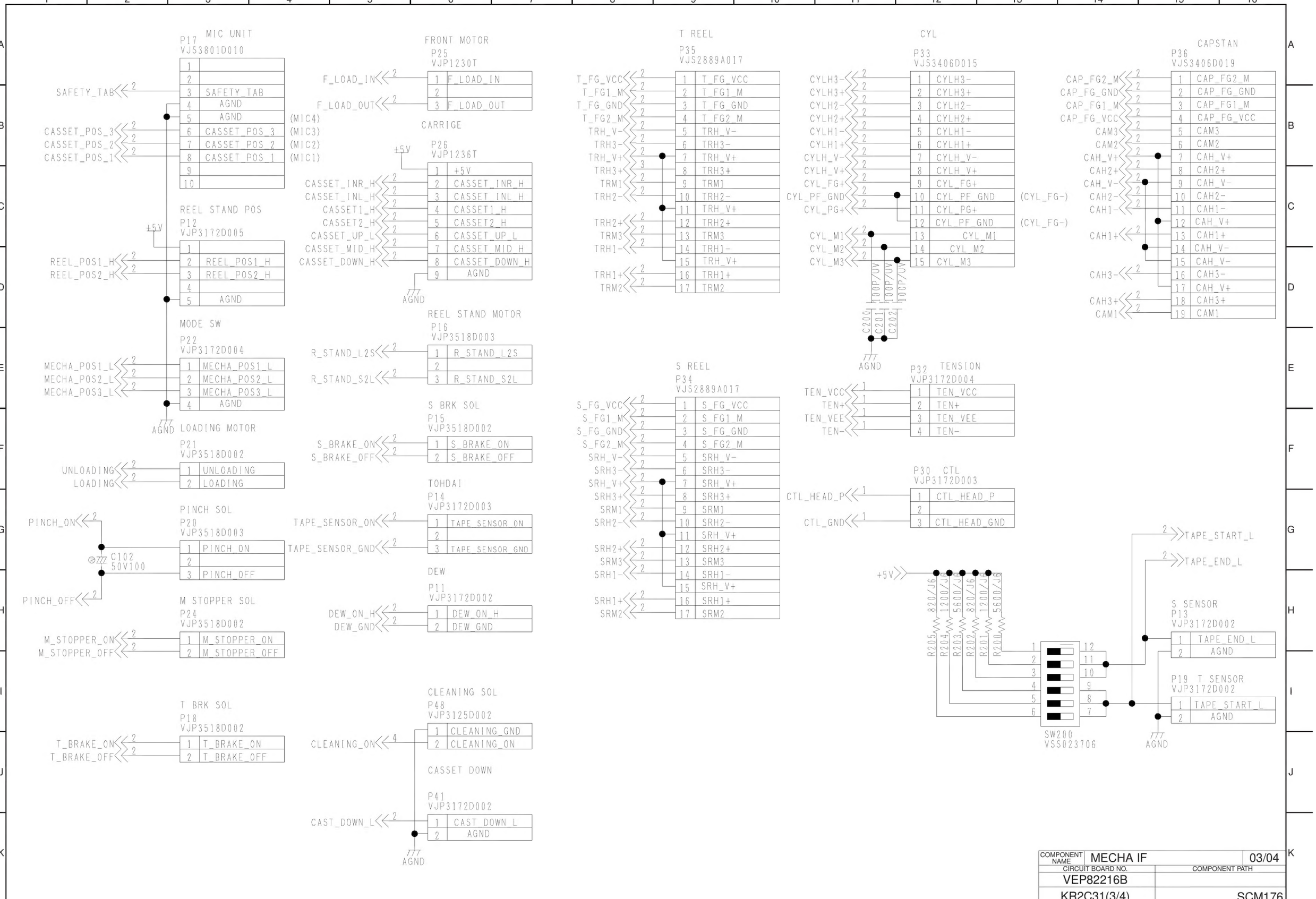
MIC UNIT
P17
VJS3801D010
SAFETY_TAB
AGND
AGND
CASSET_POS_3
CASSET_POS_2
CASSET_POS_1
(MIC4)
(MIC3)
(MIC2)
(MIC1)
REEL STAND POS
P12
VJP3172D005
+5V
REEL_POS1_H
REEL_POS2_H
MODE SW
P22
VJP3172D004
MECHA_POS1_L
MECHA_POS2_L
MECHA_POS3_L
AGND
LOADING MOTOR
P21
VJP3518D002
UNLOADING
LOADING
PINCH SOL
P20
VJP3518D003
PINCH_ON
C102
50V100
PINCH_OFF
M STOPPER SOL
P24
VJP3518D002
M_STOPPER_ON
M_STOPPER_OFF
T BRK SOL
P18
VJP3518D002
T_BRAKE_ON
T_BRAKE_OFF
FRONT MOTOR
P25
VJP1230T
F_LOAD_IN
F_LOAD_OUT
CARRIGE
P26
VJP1236T
+5V
CASSET_INR_H
CASSET_INL_H
CASSET1_H
CASSET2_H
CASSET_UP_L
CASSET_MID_H
CASSET_DOWN_H
AGND
REEL STAND MOTOR
P16
VJP3518D003
R_STAND_L2S
R_STAND_S2L
S BRK SOL
P15
VJP3518D002
S_BRAKE_ON
S_BRAKE_OFF
TOHDAI
P14
VJP3172D003
TAPE_SENSOR_ON
TAPE_SENSOR_GND
DEW
P11
VJP3172D002
DEW_ON_H
DEW_GND
CLEANING SOL
P48
VJP3125D002
CLEANING_ON
CLEANING_GND
CASSET DOWN
P41
VJP3172D002
CAST_DOWN_L
AGND
T REEL
P35
VJS2889A017
T_FG_VCC
T_FG1_M
T_FG_GND
T_FG2_M
TRH_V-
TRH3-
TRH_V+
TRH3+
TRM1
TRH2-
TRH2+
TRM3
TRH1-
TRH1+
TRM2
S REEL
P34
VJS2889A017
S_FG_VCC
S_FG1_M
S_FG_GND
S_FG2_M
SRH_V-
SRH3-
SRH_V+
SRH3+
SRM1
SRH2-
SRH2+
SRM3
SRH1-
SRH1+
SRM2
CYL
P33
VJS3406D015
CYLH3-
CYLH3+
CYLH2-
CYLH2+
CYLH1-
CYLH1+
CYLH_V-
CYLH_V+
CYL_FG+
CYL_PF_GND
CYL_PG+
CYL_M1
CYL_M2
CYL_M3
(CYL_FG-)
(CYL_FG-)
100P/UV
C200
C201
C202
AGND
CAPSTAN
P36
VJS3406D019
CAP_FG2_M
CAP_FG_GND
CAP_FG1_M
CAP_FG_VCC
CAM3
CAM2
CAH_V+
CAH2+
CAH_V-
CAH2-
CAH1-
CAH1+
CAH3-
CAH3+
CAM1
P32 TENSION
VJP3172D004
TEN_VCC
TEN+
TEN_VEE
TEN-
P30 CTL
VJP3172D003
CTL_HEAD_P
CTL_GND
CTL_HEAD_GND
+5V
820/J6
1200/J8
5600/J8
820/J6
1200/J8
5600/J8
R205
R204
R203
R202
R201
R200
SW200
VSS023706
TAPE_START_L
TAPE_END_L
S SENSOR
P13
VJP3172D002
TAPE_END_L
AGND
P19 T SENSOR
VJP3172D002
TAPE_START_L
AGND
COMPONENT NAME
MECHA IF
03/04
CIRCUIT BOARD NO.
VEP82216B
COMPONENT PATH
KR2C31(3/4)
SCM176

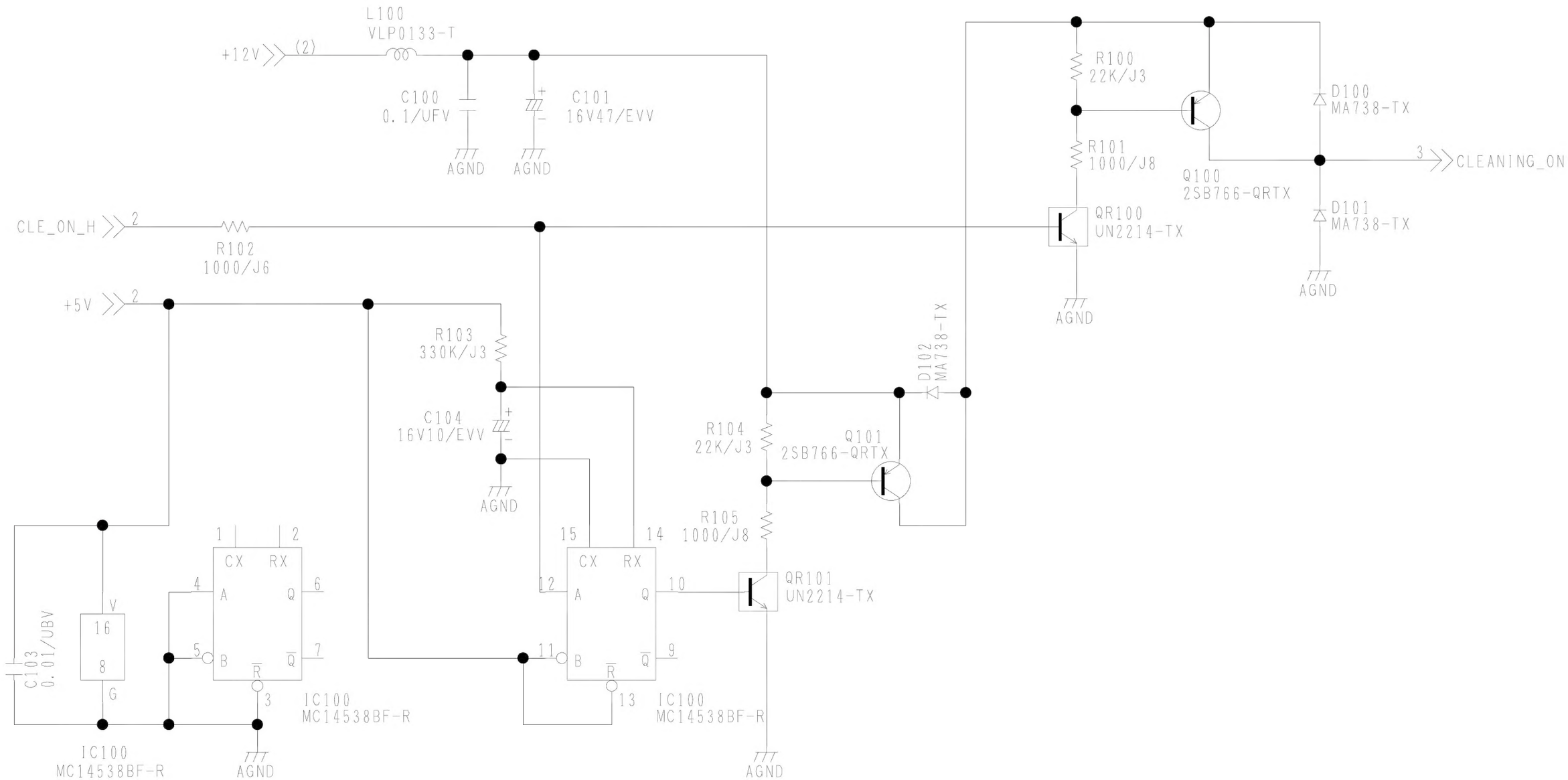

COMPONENT NAME	MECHA IF	04/04
CIRCUIT BOARD NO.		COMPONENT PATH
VEP82216B		
KR2C31(4/4)		SCM177